PE9081 CAD Drawing

SMA Female to N Male Adapter

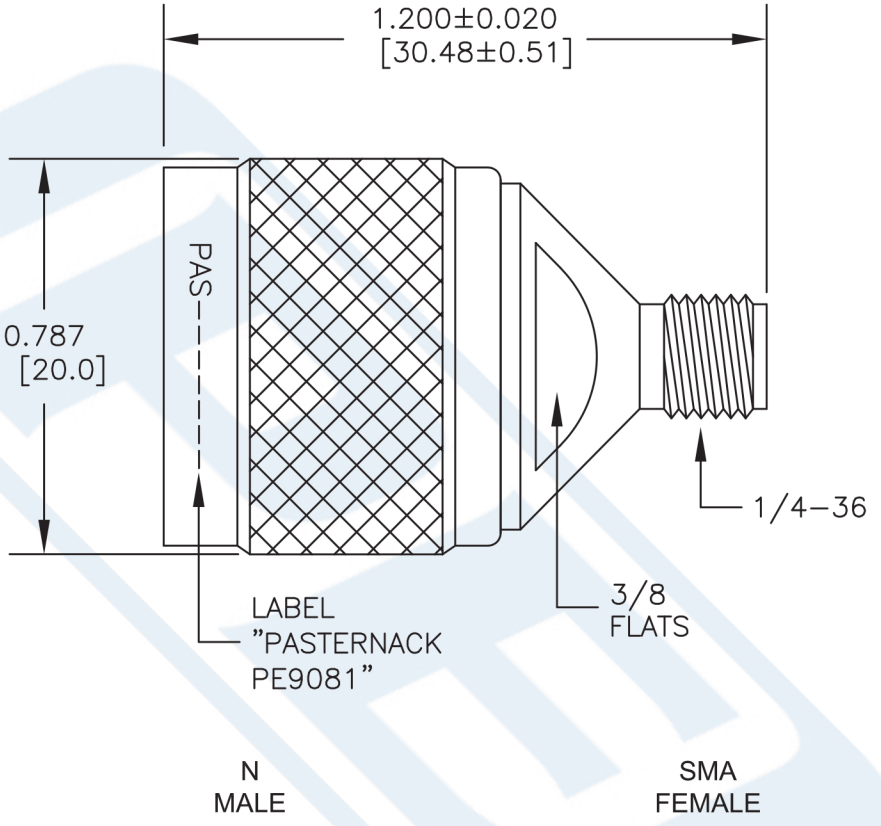

STANDARD TOLERANCES	
.X	±0.2
.XX	±0.1
.XXX	±0.05

*STANDARD TOLERANCES APPLY ONLY TO DIMENSIONS IN INCHES

PASTERNACK® THE ENGINEER'S RF SOURCE
Pasternack Enterprises, Inc.
P.O. Box 16759 | Irvine | CA | 92623
Phone: (949) 261-1920 | **Fax:** (949) 261-7451
Website: www.pasternack.com | **E-Mail:** sales@pasternack.com

Distributed by: Show Me CABLES — cables & connectors since 1995

NOTES:
1. UNLESS OTHERWISE SPECIFIED ALL DIMENSIONS ARE NOMINAL.
2. ALL SPECIFICATIONS ARE SUBJECT TO CHANGE WITHOUT NOTICE AT ANY TIME.
3. DIMENSIONS ARE IN INCHES [mm].

CAGE CODE 53919	CAD FILE 010917	SCALE N/A	SIZE A	2233

© 2017 Pasternack Enterprises All Rights Reserved