4 Binding Post Decorex Insert

PRODUCT SPECIFICATION

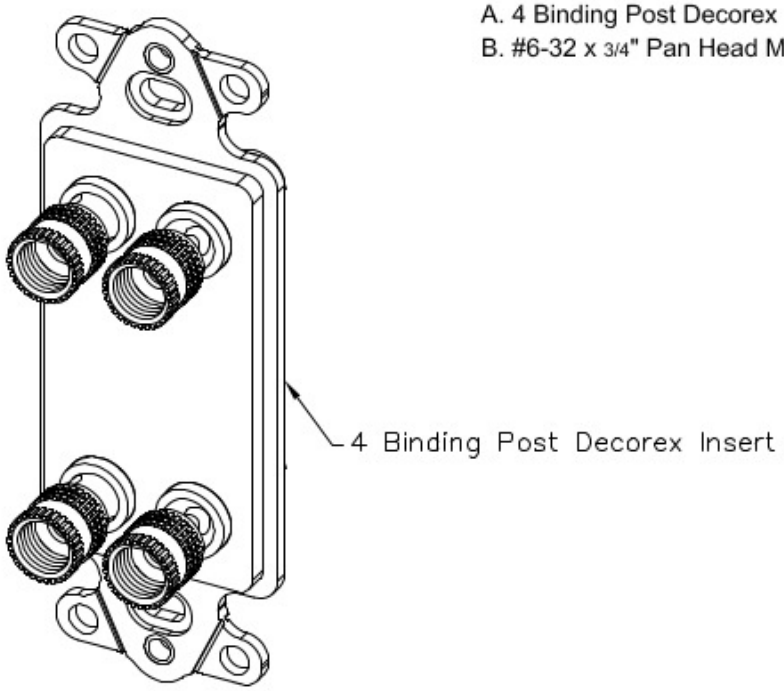

Package includes:

A. 4 Binding Post Decorex Insert, 1 pc
B. #6-32 x 3/4" Pan Head Machine Screw, 2 pcs

Features and Benefits:

- Gold plating for optimum connection quality and exceptional performance
- Binding posts accept up to 8 AWG multi-stranded audio wire or banana plugs to allow ample current flow to high wattage speakers providing superior fidelity sound
- Easy installation with a set-screw connection for incoming up to 8 AWG audio cable on the rear side
- Angled front and rear wire inserts for easy speaker wire termniation
- Supplied with red and black bands for easy polarity identification
- Ideal for individual room speakers
- Fits standard NEMA electrical boxes
- Provides a professional finished look
- Compatible with all IC107 Decorex faceplates
- Available in almond, ivory, and white
- UL listed

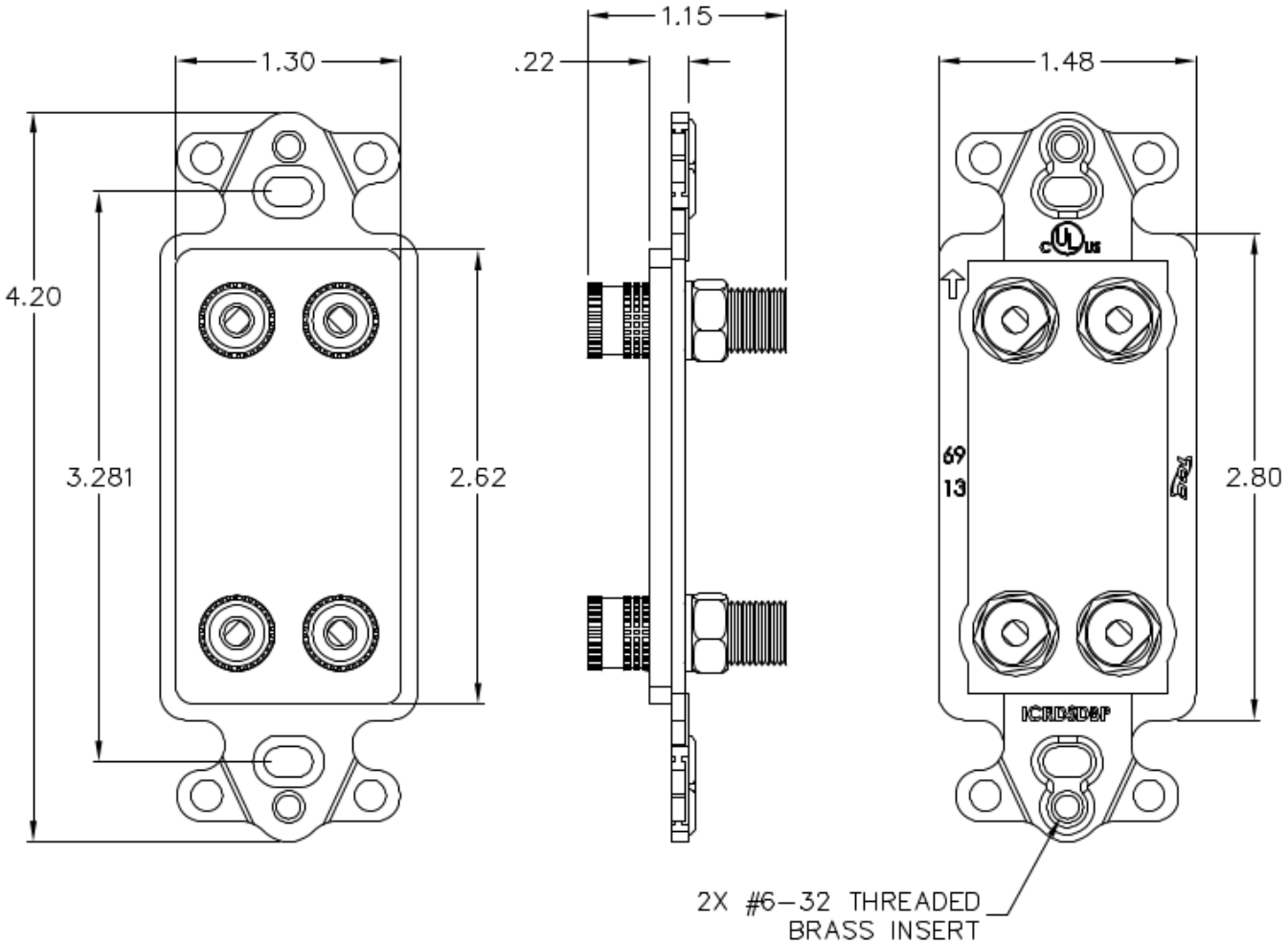

NOTE: UNLESS OTHERWISE SPECIFIED

1. HOUSING:
   A. MATERIAL: ABS, UL 94V-0
   B. FINISH: GLOSSY
   C. COLOR: XX: AL-ALMOND, IV-IVORY & WH-WHITE
2. BINDING POST:
   A. MATERIAL: BRASS WITH 3 MICRON GOLD PLATING
   B. POLARITY BAND COLOR: 2 BLACK, 2 RED